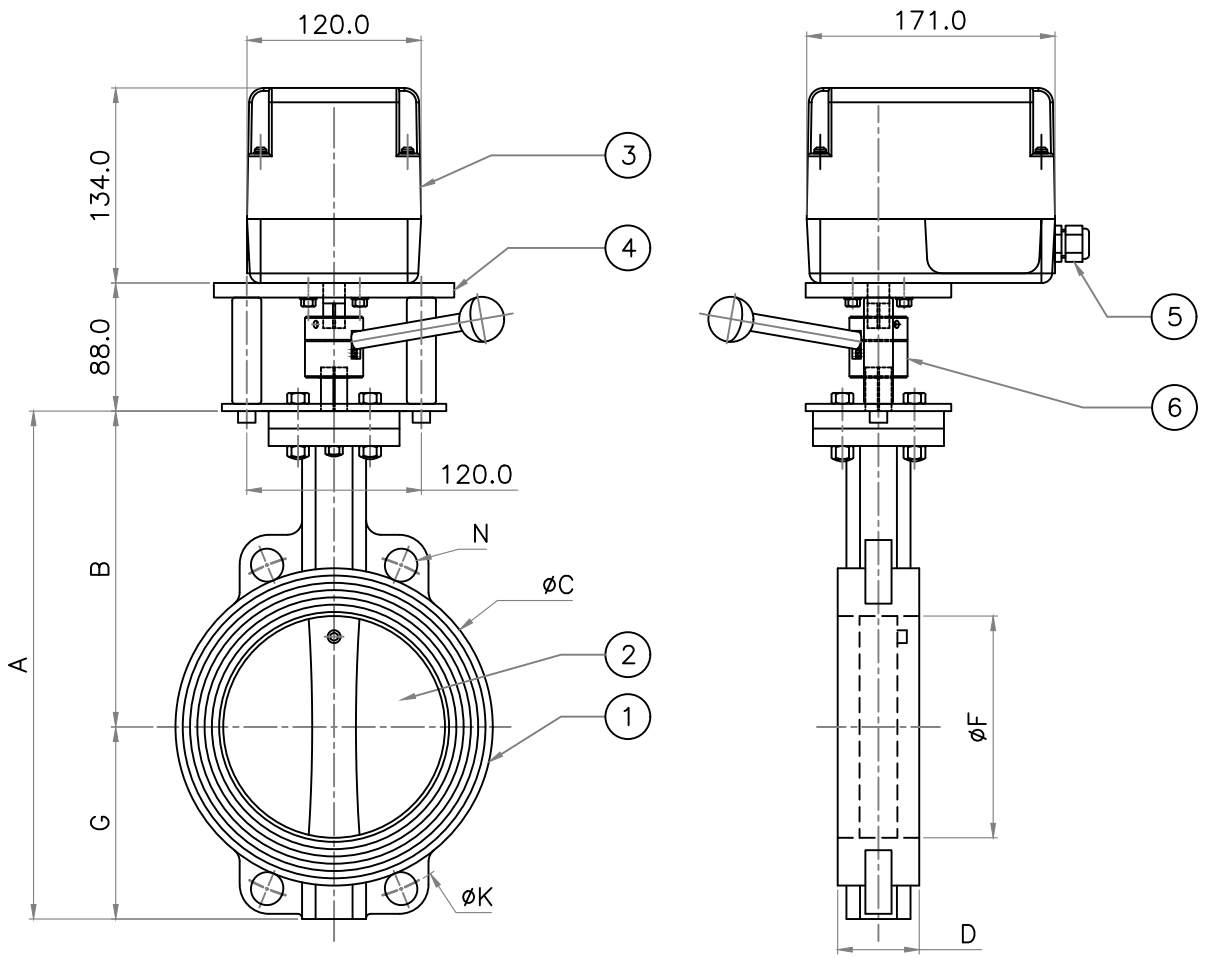

DN	NPS	A	B	ØC	D	ØF	G	ISO-5211	PN10		PN16		ANSI 150	
								FLG TYPE	ØK	N	ØK	N	ØK	N
150	6"	349	217	218	56	152.4	132	F07	240	4	240	4	241.3	4
200	8"	442	257	269	60	198.7	185	F07	295	4	295	4	298.5	4

SR. NO.	ITEM DESCRIPTION	QTY.	MODEL / MATERIAL	MAKE
6	DIS-ENGAGEBLE HAND-LEVER COUPLING	01	SS304	PEREGRINE
5	CABLE GLAND	02	1 x M20 x 1.5 & 1 x M16 x 1.5	LAPP KABEL
4	ACTUATOR MOUNTING BRACKET	01	SS304	PEREGRINE
3	ELECTRIC ACTUATOR	01	ERQT 3030/ ERQT 3060	PEREGRINE
2	BUTTERFLY DAMPER VALVE DISC	01	DUCTILE IRON, EPOXY POWDER COATED / SS ASTM A351 GR CF8	PEREGRINE
1	BUTTERFLY DAMPER VALVE BODY	01	DUCTILE IRON, EPOXY POWDER COATED / SS ASTM A351 GR CF8	PEREGRINE

BILL OF MATERIAL

NR		NEW RELEASE		
MOD.NO.	REF.	MODIFICATION	DATE	SIGN.

MATERIAL :
AS MENTIONED IN BOM

TREATMENT : –

CLASSIFICATION OF CHARACTERISTICS
CRITICAL..... ● KEY INSTRUCTION.....▲
MAJOR..... ● MINOR.....NONE

DRN.	02.05.2016	DJD
CHD.	04.05.2016	SBS
APPD.	04.05.2016	SBS

DO NOT SCALE THE DWG. IF IN DOUBT ASK ALL DIMENSIONS ARE IN MM

* THIS DRAWING IS THE PROPERTY OF M/s. PEREGRINE TECHNOLOGIES PVT. LTD. & MUST BE RETURNED ON REQUEST.
THIS IS FURNISHED AS CONFIDENTIAL INFORMATION & MUST NOT BE USED/COPIED OR LENT ANY PURPOSE WITHOUT OUR AUTHORITY IN WRITING.

CUSTOMER'S NAME :

QTY. – WT.(kg)–
SCALE : NTS

ACTUATORS & VALVE AUTOMATION
Peregrine TECHNOLOGIES PVT. LTD.

TITLE:
G A DRAWING OF DN 150 (6")/ 200 (8") DAMPER BUTTERFLY VALVE MOUNTED AND OPERATED BY ERQT 30XX

DRG.No.
16E2230206

MODEL:

SIZE A4 MOD.NO. NR